TEST REPORT

COMMISSION REGULATION (EU) (2019/2020) of 1 October 2019
Laying down ecodesign requirements for light sources and separate control gears pursuant to Directive 2009/125 EC of the European Parliament and of the Council

Report Number……..……..…..:	NTCLR21120394
Date of issue…….....…....:	2022-01-11
Tested by.....:	Alan Wang/Engineer
Supervised by.....:	Vincent Yuan/Technical Lead
Approved by.....:	Neil Zhong/Laboratory Manager
Testing Laboratory.....:	Dongguan New Testing Centre Co., Ltd.
Address.....:	3F, No. 1 the 1st North Industry Road, Songshan Lake Science & Technology Park, Dongguan, Guangdong, China, 523808
Applicant's name.....:	Shenzhen Goldenlux Co., Ltd
Address.....:	3/F Building 1, Bei Fang Yong Fa Industrial Area, Sha Jing Town, Bao'an District, Shenzhen, China
Manufacturer's name.....:	Shenzhen Goldenlux Co., Ltd
Address.....:	3/F Building 1, Bei Fang Yong Fa Industrial Area, Sha Jing Town, Bao'an District, Shenzhen, China
Test specification:	
Standard.....:	COMMISSION REGULATION (EU)2019/2020 COMMISSION DELEGATED REGULATION (EU)2019/2015
Test procedure.....:	ErP_EU2019/2020
Non-standard test method.....:	N/A
Test Report Form No.....:	ErP_EU2019/2020_TRF_V1.1

Test item description…….....…:	LED High Bay
Trade Mark...…….....…....:	GOLDENLUX® (Goldenlux)
Total number of pages…….....:	pages
Ratings.....:	220-240Vac, 50/60Hz

Possible test verdicts:

- test case does not apply to the test object.....:	N or N/A (Not applicable)
- test object does meet the requirement.....:	P(ass)
- test object does not meet the requirement.....:	F(ail)

Testing:

Date of receipt of test items.....:	2021-07-14
Date(s) of performance of tests.....:	2021-07-15 to 2021-12-28

General disclaimer:

The test results represented in this report relate only to the object tested.

This report shall not be reproduced, except in full, without the written approval of Dongguan New Testing Centre Co., Ltd.

The authenticity of this test report and its contents can be verified by contacting the Dongguan New Testing Centre Co., Ltd., responsible for this test report.

List of Attachments:

Attachment 1: Product Photo

Copy of marking plate:

Location: Attached on the external surface of product

1. The marking labels for other models are identical as above expect the model's name and some relevant parameters.

2. As declared by client that the name (or registered trade mark) and address of the certificate holder (manufacturer) or the importer or authorized representative based within the European Economic Area will be clearly affixed on the product or where that is not possible, on the packaging or in a document accompanying the product.

General remarks:

"(See remark #)" refers to a remark appended to the report.

"(see appended table)" refers to a table appended to the report.

Throughout this report a ☐comma/ ☒point is used as the decimal separator.

Determination of the test result includes consideration of measurement uncertainty from the test equipment and methods.

1. The samples were pre-conditioned for 60 minutes and were performed at ☐constant Voltage 230V@50Hz/☐constant current.

2. The tests were performed with the sample in lighting-surface vertically downward position.

3. All tests were performed on ☐LED Module as light sources/☐separate control gears to cover the eco design requirements.

4. Detail information for models covered in this report as below list:

Item	Model	Rating	CCT	LED Type	Driver Model
1	GL-UFO200-J	220-240Vac, 50/60Hz, 200W	5700K	LED	N/A

Product information	
Light sources	☒
Type of lights source:	
- Lighting technology used:	☐HL ☐LFL T5 HE ☐FLF T5 HO ☐CFLni ☐Other FL ☐HPS ☐MH ☐other HID ☒LED ☐OLED ☐mixed_____ ☐other____
- Non-directional or directional:	☐NDLS ☒DLS
- Mains or non-mains:	☒MLS ☐NMLS
- Connected light source (CLS):	☐Yes ☒No
- Colour-tuneable light source (CTLS)	☐Yes ☒No
- Envelope:	☒No ☐second ☐non-clear
- High luminance light source:	☐Yes ☒No
- Anti-glare shield:	☐Yes ☒No
- Dimmable:	☒Yes ☐No ☐only with specific dimmers: __N/A__
- Control gear:	☒Integrated ☐External
- Use of light source:	☐Indoor ☒Outdoor ☐Industry

General product parameters	
Energy consumption in on-mode [kWh/1000h]:	200
Energy efficiency class:	☒A ☐B ☐C ☐D ☐E ☐F ☐G
Rated life time (hours):	50000
Rated useful luminous flux (Φ_{use}) [lm]:	37800 in ☐ sphere ☒wide cone ☐narrow cone
Rated correlated colour temperature [K]:	5700
Rated colour rendering index:	70
On-mode power (P_{on}) [W]:	200
Standby power (P_{sb}) [W]:	0.0
Networked standby power (P_{net}) for CLS [W]:	☐__-__ ☒N/A
Outer dimensions [mm]:	Height: __-__ Width: __-__ Depth: __-__

Spectral power distribution:	See Appendix 2
Claim of equivalent power [W]:	☐ - ☒N/A
Chromaticity coordinates (x and y):	x= 0.3213
	y= 0.3404
Peak luminous intensity [cd] *(directional)*:	☒ 1834 ☐N/A
Beam angle [°] *(directional)*:	☒ 90 ☐N/A
R9 colour rendering index value *(LED and OLED)*:	☒ -20 ☐N/A
Survival factor *(LED and OLED)*:	☒ 1.0 ☐N/A
Lumen maintenance factor *(LED and OLED)*:	☒ 96.0% ☐N/A
Displacement factor (cosφ1) *(LED and OLED)*:	☒ 0.9968 ☐N/A
Colour consistency in McAdam ellipses *(LED and OLED)*:	☒ 5 ☐N/A
Claims that an LED light source replaces a fluorescent light ource without integrated ballast of a particular wattage [W] *(LED and OLED)*:	☐ - ☒N/A
Flicker metric (P_{st} LM) *(LED and OLED)*:	☒ 0.078 ☐N/A
Stroboscopic effect metric (SVM) *(LED and OLED)*:	☒ 0.007 ☐N/A
Others (Light sources)	
Lamp cap:	☐ - ☒N/A
Rated $L_{70}B_{50}$ (hours):	50000

Control gear	☐
- Control gear technology used:	☐HL light sources ☐FL light sources ☐HID light sources ☐LED or OLED light sources
- Multi-wattage:	☐Yes ☐No
- Dimmable:	☐Yes ☐No
- Connected:	☐Yes ☐No

COMMISSION REGULATION (EU) 2019/2020			
Clause	Requirement + Test	Result - Remark	Verdict
Annex I	**Definitions applicable for the annexes**		P
1.	Sample		P
	Number of samples used for test	10 pcs	P
Annex II	**Ecodesign requirements**		P
1.	**Energy efficiency requirements**		P
(a)	From 1 September 2021, the declared power consumption of a light source P_{on} shall not exceed the maximum allowed power P_{onmax} (in W), defined as a function of the declared useful luminous flux Φ_{use} (in lm) and the declared colour rendering index CRI (-) as follows:	P_{on} = 204.93W $P_{on} \leqslant P_{onmax}$	P
	$P_{onmax} = C \times (L+\Phi_{use}/(F \times \eta)) \times R$	P_{onmax} = 444.04W	P
	Where:		N
	- the values for threshold efficacy (η) and end loss factor (L) are specified in Table 1, depending on the light source type. They are constants used for computations and do not reflect true parameters of light sources. The threshold efficacy is not the minimum required efficacy; the latter can be computed by dividing the useful luminous flux by the computed maximum allowed power, for LED/OLED type see below table.		N
	Table: Threshold efficacy (η) and end loss factor (L)		N
	Light source description / η / L		N
	Organic light-emitting diode (OLED) / 65.0 / 1.5		N
	Light-emitting diode (LED) / 120.0 / 1.5	η= 120.0 L= 1.5	P
	Connected LED light sources (LED CLS) / 120.0 / 2.0		N
	- Basic values for correction factor (C) depending on light source type, and additions to C for special light source features are specified in below table.		N
	Table: Correction factor C depending on light source characteristics		N
	Light source type / Basic C		N
	Non-directional (NDLS) not operating on mains (NMLS) / 1.00		N
	Non-directional (NDLS) operating on mains (MLS) / 1.08		N
	Directional (DLS) not operating on mains (NMLS) / 1.15		N
	Directional (DLS) operating on mains (MLS) / 1.23	C= 1.23	P
	Special light source feature / Bonus on C		N
	DLS with anti-glare shield / +0.20		N
	Colour-tuneable light source (CTLS) / +0.10		N
	High luminance light sources (HLLS) / +0.0058 x Luminance-HLLS – 0.0167		N
	The bonus for HLLS shall not be combined with the basic C-value for DLS (basic-C value for NDLS shall be used for HLLS).		N
	- Efficacy factor (F) is:		N
	1.00 for non-directional light sources (NDLS, using total flux)		N
	0.85 for directional light sources (DLS, using flux in a cone)	F= 0.85	P
	- CRI factor (R) is:		N
	0.65 for CRI ⩽ 25		N
	(CRI+80)/160 for CRI > 25, rounded to two decimals	R= 0.97	P

COMMISSION REGULATION (EU) 2019/2020			
Clause	Requirement + Test	Result - Remark	Verdict
	Light sources that allow the end-user to adapt the spectrum and/or the beam angle of the emitted light, thus changing the values for useful luminous flux, colour rendering index (CRI) and /or correlated colour temperature (CCT), and/or changing the directional/non-directional status of the light source, shall be evaluated using the reference control settings.		N
	The standby power P_{sb} of a light source shall not exceed 0.5W	P_{sb} = 0.0W	P
	The networked standby power P_{net} of a connected light source shall not exceed 0.5W.		N
	The allowable values for P_{sb} and P_{net} shall not be added together		N
(b)	From 1 September 2021, the values set in below table for the minimum energy efficiency requirements of a separate control gear operating at full-load shall apply:		N
	Table: Minimum energy efficiency for separate control gear at full-load		N
	Declared output power of the control gear (P_{cg}) or declared power of the light source (P_{ls}) in W / Minimum energy efficiency		N
	Control gear for LED or OLED light sources all wattages P_{cg} / $P_{cg}^{0.81}/(1.09 \times P_{cg}^{0.81} + 2.10)$		N
	Multi-wattage separate control gears shall comply with the requirements according to the maximum declared power on which they can operate.		N
	The no-load power P_{no} of a separate control gear shall not exceed 0.5W. This applies only to separate control gear for which the manufacturer or importer has declared in the technical documentation that it has been designed for no-load mode.		N
	The standby power P_{sb} of a separate control gear shall not exceed 0.5W		N
	The networked standby power P_{net} of a connected separate control gear shall not exceed 0.5W.		N
	The allowable values for P_{sb} and P_{net} shall not be added together.		N
2.	**Functional requirements**		P
	From 1 September 2021, the functional requirements specified in below table shall apply for light sources:		N
	Table: Functional requirements for light sources		N
	Colour rendering: CRI $\geqslant$ 80		N
	Colour rendering: CRI > 0 for HID with Φ_{use} > 4 klm		N
	Colour rendering: CRI > 0 for light sources intended for Use in outdoor applications, industrial application or other application where lighting standards allow a CRI < 80	CRI= 75.1	P
	Displacement factor (DF, cos φ1) at power input P_{on} for LED and OLED MLS: No limit at $P_{on} \leqslant$ 5 W		N
	Displacement factor (DF, cos φ1) at power input P_{on} for LED and OLED MLS: DF $\geqslant$ 0.5 at 5 W < $P_{on} \leqslant$ 10 W		N
	Displacement factor (DF, cos φ1) at power input P_{on} for LED and OLED MLS: DF $\geqslant$ 0.7 at 10 W < $P_{on} \leqslant$ 25 W		N
	Displacement factor (DF, cos φ1) at power input P_{on} for LED and OLED MLS: DF $\geqslant$ 0.9 at 25 W < P_{on}	DF= 0.9968	P

COMMISSION REGULATION (EU) 2019/2020				
Clause	Requirement + Test		Result - Remark	Verdict
	Lumen maintenance factor (for LED and OLED)	The lumen maintenance factor X_{LMF}% after endurance testing according to Annex V shall be at least $X_{LMF, MIN}$% calculated as follows: $X_{LMF,MIN}\% = 100\ x\ e^{\frac{(3000\ x\ \ln(0.7))}{L_{70}}}$ Where L70 is the declared $L_{70}B_{50}$ lifetime (in hours).	$X_{LMF, MIN}$%: 96.00%	P
		If the calculated value for $X_{LMF, MIN}$% exceeds 96.0%, an $X_{LMF, MIN}$% value of 96.0% shall be used.		P
	Survival factor (SF) (For LED and OLED)	At least 9 light sources of the 10 test samples must be operational after completing the endurance testing.	10 Light sources are operational after endurance testing.	P
	Colour consistency for LED and OLED light sources	Variation of chromaticity coordinates within a six-step MacAdam ellipse or less.	5-steps MacAdam ellipse	P
	Flicker for LED and OLED MLS	P_{st} LM ≤ 1.0 at full-load	P_{st} LM= 0.078	P
	Stroboscopic effect for LED and OLED MLS	SVM ≤ 0.4 at full-load		N
		No limit for HID with Φ_{use} > 4 klm		N
		No limit for light sources intended for use in outdoor applications, industrial applications or other applications where lighting standard allow a CRI < 80.	SVM= 0.007	P
3.	**Information requirements**			N
	From 1 September 2021 the following information requirements shall apply:			N
(a)	Information to be displayed on the light source itself			P
	For all light sources, except CTLS, LFL, CFLni, other FL, and HID, the value and physical unit of the useful luminous flux (lm) and correlated colour temperature (K) shall be displayed in a legible font on the surface if, after the inclusion of safety-related information, there is sufficient space available for it without unduly obstructing the light emission.			P
	For directional light sources, the beam angle (°) shall also be indicated.			N
	If there is room for only two values, the useful luminous flux and the correlated colour temperature shall be displayed. If there is room for only one value, the useful luminous flux shall be displayed.			P

COMMISSION REGULATION (EU) 2019/2020			
Clause	Requirement + Test	Result - Remark	Verdict
(b)	Information to be visibly displayed on the packaging.		P
(1)	Light source placed on the market, not in a containing product.		P
	If a light source is placed on the market, not in a containing product, in a packaging containing information to be visibly displayed at a point-of sale prior to its purchase, the following information shall be clearly and prominently displayed on the packaging:		P
	(a) the useful luminous flux (Φ_{use}) in a font at least twice as large as the display of the on-mode power (P_{on}), clearly indicating if it refers to the flux in a sphere (360°), in a wide cone (120°) or in a narrow cone (90°);		P
	(b) the correlated colour temperature, rounded to the nearest 100K, also expressed graphically or in word, or the range of correlated colour temperatures that can be set;		P
	(c) the beam angle in degrees (for directional light sources), or the range of beam angles that can be set;		N
	(d) electrical interface details, e.g. cap- or connector-type, type of power supply (e.g. 230 V AC 50 Hz, 12 V DC);		P
	(e) the $L_{70}B_{50}$ lifetime for LED and OLED light sources, expressed in hours;		P
	(f) the on-mode power (P_{on}), expressed in W;		P
	(g) the standby power (P_{sb}), expressed in W and rounded to the second decimal. If the value is zero, it may be omitted from the packaging;		P
	(h) the networked standby power (P_{net}) for CLS, expressed in W and rounded to the second decimal. If the value is zero, it may be omitted from the packaging;		N
	(i) the colour rendering index, rounded to the nearest integer, or the range of CRI-values that can be set;		P
	(j) if CRI < 80, and the light source is intended for use in outdoor applications, industrial applications or other applications where lighting standards allow a CRI < 80, a clear indication to this effect. For HID light sources with useful luminous flux > 4000 lm, this indication is not mandatory;		N
	(k) if the light source is designed for optimum use in non-standard conditions (such as ambient temperature Ta≠25 ℃ or specific thermal management is necessary): information on those conditions;		N
	(l) a warning if the light source cannot be dimmed or can be dimmed only with specific dimmers or with specific wired or wireless dimming methods. In the latter case a list of compatible dimmers and/or methods shall be provided on the manufacturer's website;		N
	(m) if the light source contains mercury: a warning of this, including the mercury content in mg rounded to the first decimal place;		N

COMMISSION REGULATION (EU) 2019/2020			
Clause	Requirement + Test	Result - Remark	Verdict
	(n) if the light source is within the scope of Directive 2012/19/Eu, without prejudice to marking obligations pursuant to Article 14(4) of Directive 2012/19/EU, or contains mercury: a warning that it shall not be disposed of as unsorted municipal waste.		N
	Items (a) to (d) shall be displayed on the packaging in the direction meant to face prospective buyer; for other items this is also recommended, if space permits.		P
	For light sources that can be set to emit light with different characteristics, the information shall be reported for the reference control settings. In addition, a range of obtainable values may be indicated.		N
	The information does not need to use the exact wording on the list above. Alternatively, it may be displayed in the form of graphs, drawings or symbols.		P
(2)	Separate control gears		N
	If a separate control gear is placed on the market as a stand-alone product and not as a part of a containing product, in a packaging containing information to be visibly displayed to potential buyers, prior to their purchase, the following information shall be clearly and prominently displayed on the packaging:		N
	(a) the maximum output power of the control gear (for HL, LED and OLED) or the power of the light source for which the control gear is intended (for FL and HID);		N
	(b) the type of light source(s) for which it is intended;		N
	(c) the efficiency in full-load, expressed in percentage;		N
	(d) the no-load power (P_{on}), expressed in W and rounded to the second decimal, or the indication that the gear is not intended to operate in no-load mode. If the value is zero, it may be omitted from the packaging but shall nonetheless be declared in the technical documentation and on websites;		N
	(e) the standby power (P_{sb}), expressed in W and rounded to the second decimal. If the value is zero, it may be omitted from the packaging but shall nonetheless be declared in the technical documentation and on websites;		N
	(f) where applicable, the networked standby power (P_{net}), expressed in W and rounded to the second decimal. If the value is zero, it may be omitted from the packaging but shall nonetheless be declared in the technical documentation and on websites;		N
	(g) a warning if the control gear is not suitable for dimming of light sources or can be used only with specific types of dimmable light sources or using specific wired or wireless dimming methods. In the latter case, detailed information on the conditions in which the control gear can be used for dimming shall be provided on the manufacturer's or importer's website;		N
	(h) a QR-code redirecting to a free-access website of the manufacturer, importer or authorized representative, or the internet address for such a website, where full information on the control gear can be found		N
	The information dose not need to use the exact wording on the list above. Alternatively, it may be displayed in the form of graphs, drawings or symbols.		N
(c)	Information to be visibly displayed on a free-access website of the manufacturer, importer or authorized representative.		N

COMMISSION REGULATION (EU) 2019/2020			
Clause	Requirement + Test	Result - Remark	Verdict
(1)	Separate control gears		N
	For any separate control gear that is placed on the EU market, the following information shall be displayed on at least one free-access website:		N
	(a) the information specified in point 3(b)(2), except 3(b)(2)(h);		N
	(b) the outer dimensions in mm;		N
	(c) the mass in grams of the control gear, without packaging, and without lighting control parts and non-lighting parts, if any and if they can be physically separated from the control gear;		N
	(d) instructions on how to remove lighting control parts and non-lighting parts, if any, or how to switch them off or minimise their power consumption during control-gear testing for market surveillance purposes;		N
	(e) if the control gear can be used with dimmable light sources, a list of minimum characteristics that the light sources should have to be fully compatible with the control gear during dimming, and possibly a list of compatible dimmable light sources;		N
	(f) recommendations on how to dispose off it at the end of its life in line with Directive 2012/19/EU.		N
	The information does not need to use the exact wording in the list above. Alternatively, it may be displayed in the form of graphs, drawings or symbols.		N
(d)	Technical documentation		N
(1)	Separate control gears		N
	The information specified in point3(c)(2) of this Annex shall also be contained in the technical documentation file drawn up for the purposes of conformity assessment pursuant to Article 8 of Directive 2009/125/EC.		N
(e)	Information for products specified in point 3 of Annex III		N
Annex V	**Functionality after endurance testing**		P
	Models of LED- and OLED- light sources shall undergo endurance testing to verify their lumen maintenance and survival factor. This endurance testing consists of the test method outlined below. The authorities of a Member State shall test 10 units of the model for this test.		P
	The endurance test for LED and OLED light sources shall be conducted as follows:		P
(a)	Ambient conditions and test setup		P
(b)	Endurance test method	Switching 1200 cycles, 150 minutes switched ON and 30 minutes switched OFF	P

COMMISSION REGULATION (EU) 2019/2015			
Clause	Requirement + Test	Result – Remark	Verdict

Annex I	**Definitions applicable for the Annexes**		P
Annex II	**Energy efficiency classes and calculation method**		P
	The energy efficiency class of light sources shall be determined as set out in below table, on the basis of the total mains efficacy η_{TM}, which is calculated by dividing the declared useful luminous flux Φ_{use} by the declared on-mode power consumption P_{on} and multiplying by the applicable factor F_{TM} of below table, as follows:		P
	$\eta_{TM} = (\Phi_{use}/P_{on}) \times F_{TM}$ (lm/W)		N
	Table Energy efficiency classes of light sources		N
	Energy efficiency class / Total mains efficacy η_{TM} (lm/W)		N
	A / $210 \leq \eta_{TM}$	η_{TM}= 216.98	P
	B / $185 \leq \eta_{TM} < 210$		N
	C / $160 \leq \eta_{TM} < 185$		N
	D / $135 \leq \eta_{TM} < 160$		N
	E / $110 \leq \eta_{TM} < 135$		N
	F / $85 \leq \eta_{TM} < 110$		N
	G / $\eta_{TM} < 85$		N
	Table: Factors F_{TM} by light source type		N
	Light source type / F_{TM}		N
	Non-directional (NDLS) operating on mains (MLS) / 1.000		N
	Non-directional (NDLS) not operating on mains (NMLS) / 0.926		N
	Directional (DLS) operating on mains (MLS) / 1.176	F_{TM}= 1.176	P
	Directional (DLS) not operating on mains (NMLS) / 1.089		N
Annex III	**Label for light sources**		P
1.	**LABEL**		P
	If the light source is intended to be marketed through a point of sale, a label produced in the format and containing information as set out in this Annex is printed on the individual packaging.		P
	Suppliers shall choose a label format between point 1.1 and point 1.2 of this Annex. The label shall be:		P
	- for the standard-sized label at least 36 mm wide and 75 mm high		P
	- for the small-sized label (width less than 36 mm) at least 20 mm wide and 54 mm high		N
	The packaging shall not be smaller than 20 mm wide and 54 mm high.		P
	Where the label is printed in a larger format, its content shall nevertheless remain proportionate to the specifications above. The small-sized label shall not be used on packaging with a width of 36 mm or more.		P
	The label and the arrow indicating the energy efficiency class may be printed in monochrome as specified in points 1.1 and 1.2, only if all other information, including graphics, on the packaging is printed in monochrome.		P

COMMISSION REGULATION (EU) 2019/2015			
Clause	Requirement + Test	Result – Remark	Verdict
	If the label is not printed on the part of the packaging meant to face the prospective customer, an arrow containing the letter of the energy efficiency class shall be displayed as hereafter, with the colour of the arrow matching the letter and the colour of the energy class. The size shall be such that the label is clearly visible and legible. The letter in the energy efficiency class arrow shall be Calibri Bold and positioned in the centre of the rectangular part of the arrow and the letter of the efficiency class.		P
1.1	Standard-sized label:		P
	The label shall be:		P
	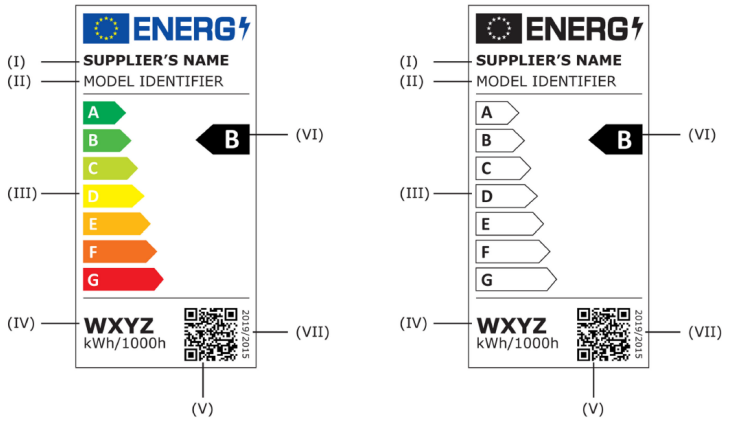		P
1.2	Small-sized label:		N
	The label shall be:		N
	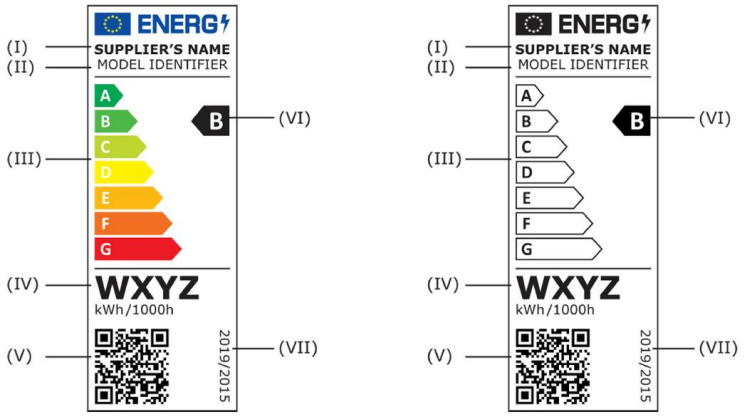		N
1.3	The following information shall be included in the label for light sources:		P
I.	supplier's name or trade mark;		P
II.	supplier's model identifier;		P
III.	scale of energy efficiency class from A to G;		P
IV.	the energy consumption, expressed in kWh of electricity consumption per 1000 hours, of the light source in on-mode;		P
V.	QR-code;		P
VI.	the energy efficiency class in accordance with Annex II;		P
VII.	the number of this Regulation that is '2019/2015'.		P

COMMISSION REGULATION (EU) 2019/2015			
Clause	Requirement + Test	Result – Remark	Verdict
Annex V	**Product Information**		P
1.	**Product information sheet**		P
1.1	Pursuant to point 1(b) of Article 3, the supplier shall enter into the product database the information as set out in Product information including when the light source is a part in a containing product.		P
	For light sources that can be tuned to emit light at full-load with different characteristics, the values of parameters that vary with these characteristics shall be reported at the reference control setting.		N
	If the light source is no longer placed on the EM market, the supplier shall put in the product database the date (mouth, year) when the placing on the EM market stopped.		P
2.	**Information to be displayed in the documentation for a containing product**		P
	If a light source is placed on the market as a part in a containing product, the technical documentation for the containing product shall clearly identify the contained light source(s), including the energy efficiency class.		P
	If a light source is placed on the market as a part in a containing product, the following text shall be displayed, clearly legible, in the user manual or booklet of instructions:		P
	'This product contains a light source of energy efficiency class <X>' where <X> shall be replaced by the energy efficiency class of the contained light source.		P
	If the product contains more than one light source, the sentence can be in the plural, or repeated per light source, as suitable.		P
3.	**Information to be displayed on the supplier's free access website:**		P
(a)	The reference control settings, and instructions on how they can be implemented, where applicable;		P
(b)	Instructions on how to remove lighting control parts and/or non-lighting parts, if any, or how to switch them off or minimize their power consumption;		P
(c)	If the light source is dimmable: a list of dimmers it is compatible with, and the light source – dimmer compatibility standard(s) it is compliant with, if any;		P
(d)	If the light source contains mercury: instructions on how to clean up the debris in case of accidental breakage;		N
(e)	Recommendations on how to dispose of the light source at the end of its life in line with Directive 2012/19/EU of the European Parliament and of the Council.		P
4.	**Information for products specified in point 3 of Annex IV**		N
Annex VI	**Technical documentation**		P
1.	**The technical documentation referred to in point 1(d) of Article 3 shall include:**		P
(a)	the name and address of the supplier		P
(b)	supplier's model identifier;		P
(c)	the model identifier of all equivalent models already placed on the market;		P
(d)	identification and signature of the person empowered to bind the supplier;		P
(e)	the declared and measured values for the following technical parameters:		P

COMMISSION REGULATION (EU) 2019/2015			
Clause	Requirement + Test	Result – Remark	Verdict
(1)	useful luminous flux (Φ_{use}) in lm;		P
(2)	colour rendering index (CRI);		P
(3)	on-mode power (P_{on}) in W;		P
(4)	beam angle in degrees for directional light sources (DLS);		N
(5)	correlated colour temperature (CCT) in K for FL and HID light sources;		N
(6)	standby power (P_{sb}) in W, including when it is zero;		P
(7)	networked standby power (P_{net}) in W for connected light sources (CLS);		N
(8)	displacement factor (cos φ1) for LED and OLED mains light sources;		P
(9)	colour consistency in MacAdam ellipse steps for LED and OLED light sources;		P
(10)	luminance-HLLS in cd/mm^2 (only for HLLS)		N
(11)	flicker metric (P_{st}LM) for LED and OLED light sources;		P
(12)	stroboscopic effect metric (SVM) for LED and OLED light sources;		P
(13)	Excitation purity, only CTLS, for the following colours and dominant wavelength within the given range		N
	Colour: Dominant wave-length range Blue: 440 nm – 490 nm Green: 520 nm – 570 nm Red: 610 nm – 670 nm		N
(f)	the calculations performed with the parameters, including the determination of the energy efficiency class;		N
(g)	references to the harmonized standards applied or other standards used;		N
(h)	testing conditions if not described sufficiently in point (g);		N
(i)	the reference control settings, and instructions on how they can be implemented, where applicable;		N
(j)	instructions on how to remove lighting control parts and/or non-lighting parts, if any, or how to switch them off or minimize their power consumption during light source testing;		N
(k)	specific precautions that shall be taken when the model is assembled, installed, maintained or tested.		N
Annex VII	**Information to be provided in visual advertisements, in technical promotional material and in distance selling, except distance selling on the internet.**		P
Annex VIII	**Information to be provided in the case of distance selling on the internet.**		P

Appendix 1 – Summary of Test

Summary of Test Results (Verification tolerances)				
Model:	**GL-UFO200-J**			
Parameter	Declared value	Determined value (Arithmetic mean)	Requirement	Verdict
Full-load on-mode power P_{on} [W]	200	204.93	P_{on}≤2W, the determined value shall not exceed the declared value by more than 0.20W. 2W<P_{on}≤5W, the determined value shall not exceed the declared value by more than 10%. 5W<P_{on}≤100W, the determined value shall not exceed the declared value by more than 5%. 100W<P_{on}, the determined value shall not exceed the declared value by more than 2.5%.	P
Displacement factor [0-1]	0.9	0.9968	The determined value shall not be less than the declared value minus 0.1 units.	P
Useful luminous flux Φ [lm]	37800	37808.4	The determined value shall not be less than the declared value minus 10%	P
No-load power P_{no} [W]	-	-	The determined value shall not exceed the declared value by more 0.10W.	-
Standby power P_{sb} [W]	0.0	0.0		P
Networked standby power P_{net} [W]	-	-		-
Control gear efficiency [0-1]	-	-	The determined value shall not be less than the declared value minus 0.05 units.	-
Flicker [P_{st} LM]	0.1	0.078	The determined value shall not exceed the declared value by more than 10%.	P
Stroboscopic effect [SVM]	0.1	0.007		P
Colour consistency [MacAdam ellips steps]	5	4.4	The determined number of steps shall not exceed the declared number of steps. The centre of the MacAdam ellipse shall be the centre declared by the supplier with a tolerance of 0.005 units.	P
Correlated colour temperature [K]	5700	6008	The determined value shall not deviate from the declared value by more than 10%.	P
CRI [0-100]	70	75.1	The determined value shall not be less than the declared value by more than 2.0 units.	P
Beam angle [°]	90	97.7	The determined value shall not deviate from the declared value by more than 25%.	P
Lumen maintenance factor (for LED and OLED)	96.0%	97.44%	The determined X_{LMF}% of the sample following the test shall not be less than $X_{LMF, MIN}$%.	P
Survival factor (for LED and OLED)	1.0	1.0	At least 9 light sources of the test sample must be operational after completing the test.	P
Excitation purity [%]	-	-	The determined value shall not be less than the declared value minus 5%.	-

Appendix 2 – Test Data Sheet

Test Data Sheet 1: Energy Efficiency

Model:	**GL-UFO200-J**							
Sample No.	P_{on} [W]	#Φ_{use} [lm]	Φ_{Total} [lm]	Efficacy η_{use} [lm/W]	Efficacy η_{Total} [lm/W]	Beam angle (°)	P_{sb} [W]	P_{net} [W]
S1	204.93	37805.2	41589.9	184.48	202.95	97.6	0.00	-
S2	205.13	37124.8	40841.4	180.98	199.10	97.8	0.00	-
S3	205.34	38599.2	42463.4	187.98	206.80	98.0	0.00	-
S4	201.86	37124.8	40841.4	183.91	202.33	98.0	0.00	-
S5	204.32	37427.3	41174.1	183.18	201.52	97.5	0.00	-
S6	203.29	38221.2	42047.5	188.01	206.84	98.1	0.00	-
S7	207.80	39358.7	43298.9	189.41	208.37	97.3	0.00	-
S8	202.47	37351.6	41090.9	184.48	202.95	97.3	0.00	-
S9	205.34	38564.8	42425.5	187.81	206.61	98.1	0.00	-
S10	208.82	36506.0	40160.6	174.82	192.32	97.3	0.00	-
Arithmetic mean	204.93	37808.4	41593.4	184.51	202.98	97.7	0.00	-

#Useful luminous flux in ☐ sphere ☒wide cone ☐narrow cone

Note:

1. P_{on}: Full-load on-mode Power
2. Φ_{use}: Useful luminous flux
3. Φ_{Total}: Total luminous flux
4. η_{use}: Efficacy based on Φ_{use}
5. η_{Total}: Efficacy based on Φ_{Total}
6. P_{sb}: Standby power
7. P_{net}: Networked standby power

Test Data Sheet 2: Functional

Model:	**GL-UFO200-J**									
Sample No.	CCT [K]	CRI	R9	SDCM	Chromaticity		DF	PF	P_{st} LM	SVM
					x	y				
S1	5958	75.1	-21	4.6	0.3224	0.3402	0.9973	0.9947	0.105	0.010
S2	5856	75.1	-19	4.5	0.3246	0.3399	0.9984	0.9959	0.072	0.006
S3	5963	75.5	-22	4.1	0.3224	0.3385	0.9965	0.9927	0.064	0.008
S4	6064	75.0	-19	4.2	0.3200	0.3425	0.9983	0.9946	0.082	0.009
S5	5971	74.8	-21	4.0	0.3222	0.3392	0.9977	0.9934	0.069	0.009
S6	6108	75.3	-19	4.1	0.3193	0.3397	0.9960	0.9948	0.077	0.007
S7	6085	74.8	-23	4.7	0.3199	0.3380	0.9976	0.9922	0.084	0.005
S8	6082	75.1	-20	5.0	0.3197	0.3414	0.9953	0.9937	0.071	0.007
S9	5944	75.6	-19	4.8	0.3226	0.3419	0.9952	0.9933	0.069	0.006
S10	6048	75.0	-21	4.3	0.3203	0.3429	0.9952	0.9933	0.088	0.006
Arithmetic mean	6008	75.1	-20	4.4	0.3213	0.3404	0.9968	0.9939	0.078	0.007

Test Data Sheet 3: Functional - Continued

Model:	**GL-UFO200-J**				
Sample No.	Total luminous flux Φ_{Total} [lm]	Total luminous flux at 3000 hours [lm]	Lumen maintenance factor (X_{LMF}%)	Switching cycles (1200 cycles)	Survival factor
S1	41589.9	40970.3	98.51%	Pass	Survival
S2	40841.4	40337.0	98.76%	Pass	Survival
S3	42463.4	40964.5	96.47%	Pass	Survival
S4	40841.4	40201.9	98.43%	Pass	Survival
S5	41174.1	40678.1	98.80%	Pass	Survival
S6	42047.5	40019.8	95.18%	Pass	Survival
S7	43298.9	42196.2	97.45%	Pass	Survival
S8	41090.9	40110.3	97.61%	Pass	Survival
S9	42425.5	41011.1	96.67%	Pass	Survival
S10	40160.6	38774.5	96.55%	Pass	Survival
Arithmetic mean	41593.4	40526.4	97.44%	-	1.0

Test Data Sheet 4: Energy efficiency classes and label

Model:	**GL-UFO200-J**
Total mains efficacy η_{TM} (lm/W)	216.98
Energy efficiency classes	A
Energy consumption [kWh/1000h]	200
Label sample	

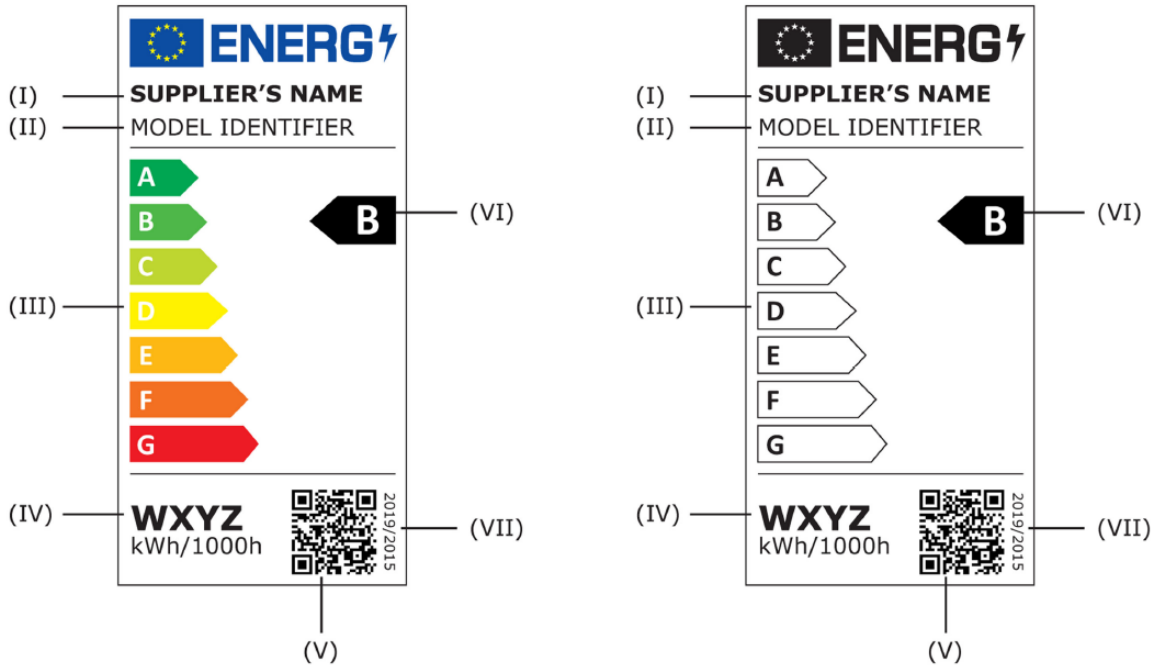

I.	Supplier's name or trade mark;
II.	Supplier's model identifier;
III.	Scale of energy efficacy class from A to G
IV.	The energy consumption: 200kWh/1000h
V.	QR-code (quick response): means a matrix barcode included on the energy label of a product model that links to that model's information in the public part of the product database.
VI.	The energy efficiency class: A
VII.	The number of this Regulation that is '2019/2015'

Test Data Sheet 5: Luminous intensity distribution diagram:

Model:	GL-UFO200-J

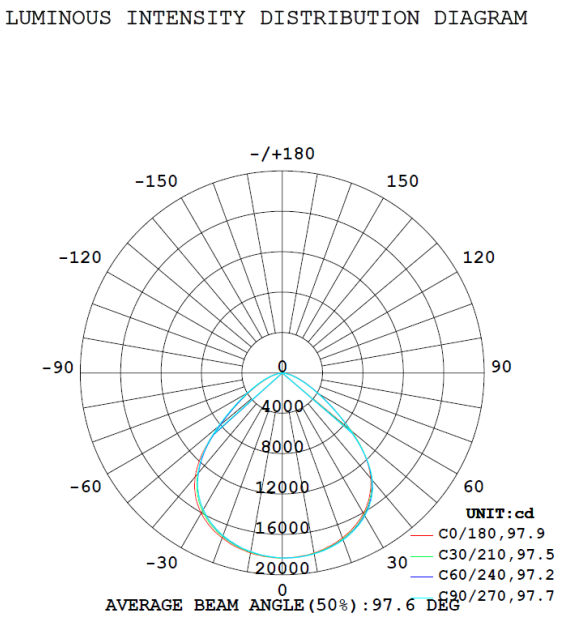

Test Data Sheet 6: Spectral distribution:

Model:	GL-UFO200-J

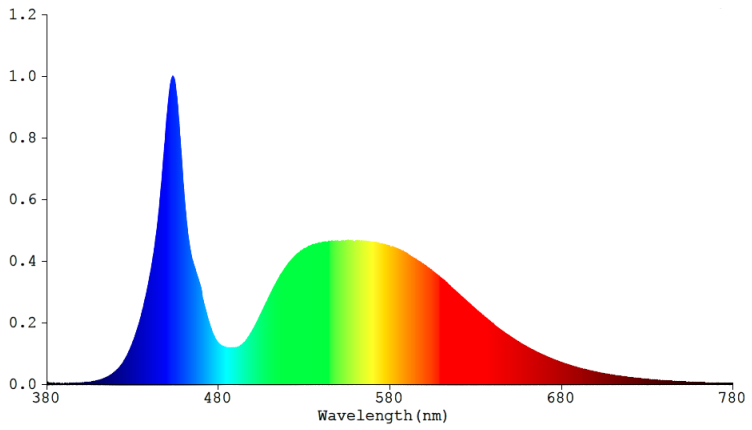

Appendix 3: List of Equipment

Equipment ID	Equipment Name	Last Cal.	Due Cal.
NTC-F01-006	2.0 meter Integrating Sphere	2020-11-12	2021-11-11
NTC-F01-001	Goniophotometer System	2020-11-12	2021-11-11
NTC-F01-012	Standard Lamp	2020-11-12	2021-11-11
NTC-F01-013	Standard Lamp	2020-11-12	2021-11-11
NTC-F01-031	Digital Power Meter	2020-08-22	2021-08-21
NTC-F01-020	Temperature & Humidity Meter	2020-11-13	2021-11-12
NTCD-S049	Digital Phosphor Oscilloscope	2020-11-12	2021-11-11
NTCD-S001	Temperature Data Logger	2020-11-12	2021-11-11
NTC-F01-047	Flicker Meter	2020-11-12	2021-11-11
NTC-F01-006	2.0 meter Integrating Sphere	2021-11-10	2021-11-11
NTC-F01-013	Standard Lamp	2021-11-10	2022-11-09
NTC-F01-031	Digital Power Meter	2021-08-22	2022-08-21
NTC-F01-020	Temperature & Humidity Meter	2021-11-15	2022-11-14
NTC-F01-001	Goniophotometer System	2021-11-10	2022-11-09
NTC-F01-012	Standard Lamp	2021-11-10	2022-11-09
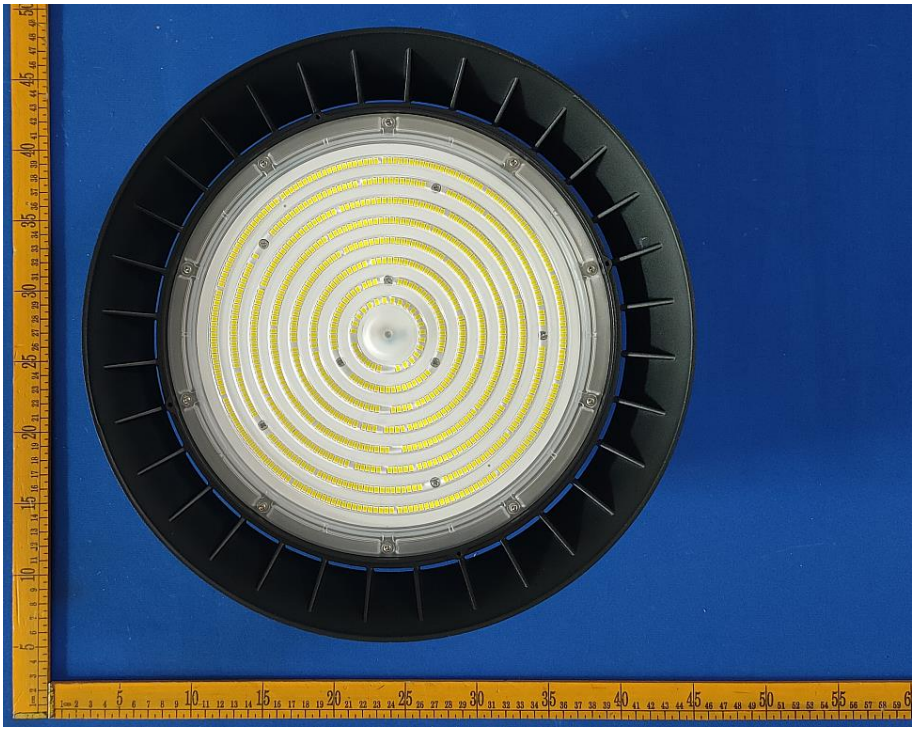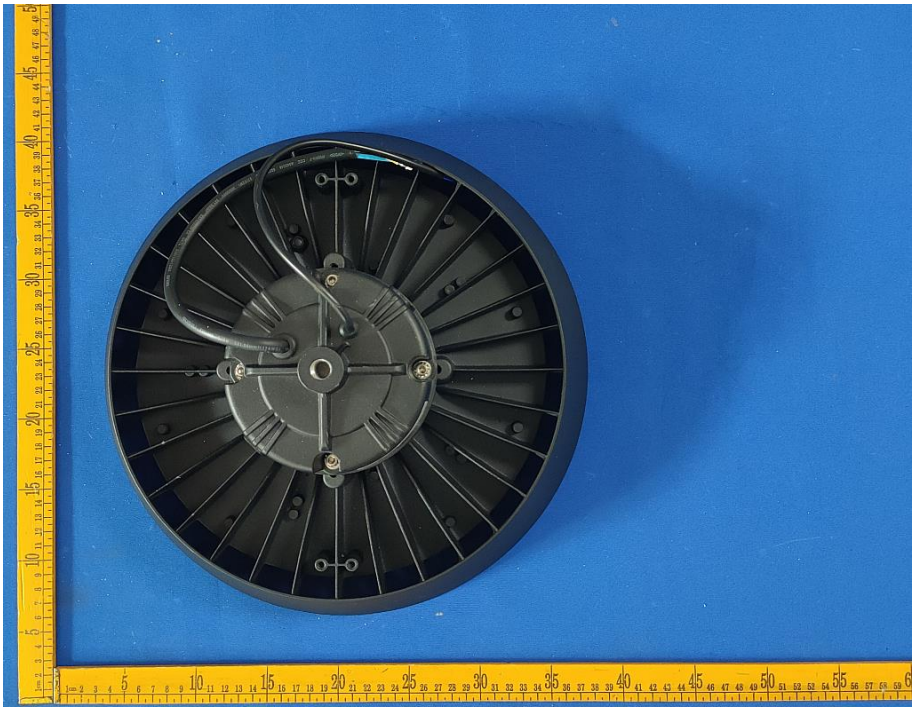
Attachment 1: Product